TECHNICAL DATA

Vertical & Horizontal Bladder Tank

Foam Storage Devices | Model MXC | EN13445 & ASME Sec. VIII Div. 1

1 General description

The bladder tank is a carbon steel pressure vessel containing an elastomeric bladder between the water and foam concentrate.

The bladder permits water pressure to be transferred to the foam concentrate without the two fluids mixing together.

This Technical Data Page is intended for trained experts. It contains basic information needed to use the product described. Legally binding is the product operation and maintenance manual which must be observed.

For further information, please contact the appropriate sales office in ***Section 5 Availability*** or refer to the technical documentation.

The contents of this publication are subject to modifications without notice.

Technical data can be found on the KCA website at http://www.kcantincendi.com. The website may include a more recent edition of this technical data sheet.

For further information, please contact KCA or refer to the technical documentation. The contents of this publication are subject to modifications without notice.





Images for illustrative purposes only.
Refer to drawings for actual design details.

2 Listings and approvals

The bladder tank is FM Approved and/or UL Listed as part of a fire extinguishing system combining designated foam concentrates, model KFP ratio controllers, Model KBP ILBP's and discharge devices. Approved and listed system components can be found at www.approvalguide.com and https://iq.ulprospector.com.

- FM Approved – Low Expansion Foam Systems (FM5130)
- UL Listed – Guide GHXV.EX6015 & GHXV. EX26572 (UL162)
- CNBOP Approved. CNBOP-PIB-KOT-2024/0411-1005wydanie 1 F001/01/0924 CNBOP-PIB
- Manufactured according to ASME Sec. VIII Div.1 or EN13445
- CE marked according to the PED Directive 2014/68/EU (Europe Only)
- ASME U-1A ("U" Stamp) certification process available on request with additional charge. See data page TD2.3.1.3 for ordering information.

NOTICE *Other international approval certificates may be available upon request.*

"SFFF compatible" refers to this product as being part of a SFFF Foam system that has been tested to recognised standards. Not all configurations are available. Please consult technical data and/or the Approval/Listing for usage requirements.

SFFF compatible

DOC ID: TD2.3.1.1/28042026/en | Rev 26.1

3 Technical data

3.1 Construction features

- Vertical tanks on legs or horizontal tanks on saddles
- Legs and saddles are provided with ground fixing holes
- Approved system design pressure of 175 psi (12.1 bar) or 232 psi (16.0 bar)
- 100% pressure tested according to the applied design code
- Shell and heads in ASTM A516 Gr. 70 or EN10028-3 P275NH/P355NH
- Lockable corrosion resistant brass tank trim/service ball valves (UL Listed / FM Approved)
- Inspection flange available on left or right side of horizontal tanks (left as standard)
- Machine welded circumferential and longitudinal seams for maximum quality and durability
- Welded lifting lugs to facilitate safe handling operations
- Earth lug for electrical safety
- Safety thermal valve on water side of bladder to prevent slow overpressure and relieve thermal fluctuations
- Bladder equipped with cast rubber caps to ensure water & foam integrity under constant pressure
- Bladder specifically tested for compatibility with foams shown in FM Approval and UL Listing
- Oversized to permit concentrate thermal expansion (volume expansion allowance)
- Tank equipped with inside protection at any opening to ensure no damage to the bladder
- Internal PVC foam concentrate distribution pipe ensures optimal foam concentrate usage
- Internal water distribution channel to equalize the water pressure everywhere avoiding damage to the bladder and to drain the tank during service and maintenance
- Nameplate holder to avoid undetected corrosion on the tank's shell behind the plate
- Analog level indicator or classic sight tube (specify at point of order)
- External epoxy zinc rich primer with aliphatic polyurethane finish tested by FM and UL for corrosive atmosphere (salt fog)

3.2 Standard materials

Tank shell and heads:	ASTM A516 Gr. 70 or P275NH to EN10028-3 or P355NH to EN10028-3
Bladder:	Reinforced Hypalon, polyurethane or NBR and EPDM (material used depend on tank size and foam concentrate)
Trim valves:	Brass
Safety thermal relief valve:	Brass
Pressure gauges:	Stainless steel
Level indicator:	Hydrometer: Stainless steel or Sight tube: PVC
Paint:	Epoxy zinc rich primer with aliphatic polyurethane finish
Standard colour:	Flame red RAL3000
Flange material:	ASTM A105
Flange connection:	ANSI B16.5 Class 150

Table 3.2.1 - Standard materials

3.3 Standard design specifications

Design pressure:	175 psi / 12.1 bar (1.2 MPa) **or** 232 psi / 16.0 bar (1.6 MPa)
Operating temperature range:	35 °F to 120 °F (1.7 °C to 49 °C)
Capacity:	***See tables***
Empty weight:	***See tables***
Proportioning range:	***See ratio controller, ILBP or Wide Range Proportioner data sheet***
(*) Further temperature limitations come from foam concentrate and water.	

Table 3.3.1 - Standard design specifications

© K.C. Antincendi S.r.l. | Via Pavia 76 | 27042 Bressana Bottarone (PV) | Italy | info@kcantincendi.com

3.4 Ordering information

The following information is provided to ensure that the correct design requirements are provided to KCA during the order and manufacturing process. Mandatory information is required in every case. Optional information is required in case of special project or specification requirements. Pre-assembled bladder tank information is required when the bladder tank will be supplied pre-piped including the model KFP ratio controller.

	Ref	Criteria	Option
Mandatory information (required for quote | order processing)	1a	Configuration	a) Vertical b) Horizontal c) Twin vertical
	1b	Capacity	a) 25 to 4,000 US gallons vertical b) 50 to 5,250 US gallons horizontal (***see tables for available sizes***)
	1c	Design code	a) EN13445, b) ASME Sec. VIII Div.1**
	1d	Standby pressure rating	a) 175 psi / 12.1 bar (1.2 MPa) b) 232 psi / 16.0 bar (1.6 MPa)
	1e	Inspection flange	a) Left b) Right (required for horizontal tanks only)
	1f	Level indicator	a) Sight tube b) Level gauge
	1g	Language	Select bladder tank manual language (***see table 12.1.2***)
Optional	2a	Design temperature	Contact technical department
	2b	Corrosion allowance	Contact technical department
	2c	Radiographic test report (*)	Contact technical department
	2d	Liquid penetrant test report (*)	Contact technical department
Pre-Assembled with ratio controller *	3a	Ratio controller size(s)	2", 2.5", 3", 4", 6", 8"
	3b	Direction of flow	a) Left to right b) Right to left (direction of flow as you face the tank)
	3c	Water line piping	a) Carbon steel
	3d	Foam line piping	a) Carbon steel b) Stainless steel
	3e	Foam concentrate type***	a) AFFF 1% Ultra LT C6 b) AFFF 3%S C6 c) ARC 3X3S C6 d) FP 3% C6 e) AFFF 3%M C6 f) AFFF 6% Ultra C6 g) LS-xMax 3% h) Enviro ARK i) Enviro USP j) Enviro AX1 1%
	3f	Concentrate control valve	Viking Halar® CCV (FM|UL) or Hydraulic ball valve

* *With additional cost*
** *Tank manufactured in accordance with ASME Sec. VIII Div. 1 only. If U-1A certification process is desired,* ***refer to data page TD2.3.1.3.***
*** *These foam concentrates have been tested for bladder compatibility as per UL162 and/or FM5130. The long term compatibility of other foams concentrates cannot be verified.*

Table 3.4.1 - Ordering information

INFORMATION

Some of the available options may be not covered by the UL Listing or FM Approval. Please always make reference to the appropriate approval directory or guides or contact KCA for further assistance.

© K.C. Antincendi S.r.l. | Via Pavia 76 | 27042 Bressana Bottarone (PV) | Italy | info@kcantincendi.com

4 Scope of delivery

Ensure that all components are complete and in good condition.
The bladder tank is supplied in or on a suitable wooden pallet skid or shipping crate in the horizontal position.
All bladder tanks have lifting lugs to allow safe maneuverability on site.
Tank is supplied empty with pre-installed bladder.
Small trim valves and contents level device are supplied pre-assembled to the tank as standard.
Safety thermal relief valve supplied as standard according to design code selected.
Anchor fixing bolts are not part of our supply scope.

Standard documentation	Optional documentation *
Warranty certificate	Dimensional drawings
PED Declaration of conformity	Material certificates type 3.1 to EN10204
Safety thermal relief valve declaration of conformity	Certificate of conformity type 2.1 to EN10204
Hydrostatic pressure test certificate	Design structural calculations
Bladder pneumatic test certificate	Spot or full radiographic examination with report (when not mandatorily required by design parameters)
Painting inspection certificate	Spare parts list
Final inspection certificate	Copy of procedure qualification record (PQR) and welding procedure specification (WPS) according to tank construction code
Operating, filling and maintenance manual (English)	Operating, filling and maintenance manual (Language)
** Contact KCA for further information and price.*	

Table 4.1.1 - Documentation

5 Availability

Please contact KCA for further information.
The product is available directly from KCA and official distributors only.

6 Product variants

6.1 Options

- Pre-assembled with ratio controller and water/foam pipe work
- Twin tank configurations
- Special coatings for salt-water applications or harsh environmental conditions
- Nameplate in corrosion resistant material
- Increased wall thickness for corrosion allowance
- Internal coatings such as epoxy tar
- 232 psi / 16.1 bar (1.6 MPa) design pressure rating with UL Listing and FM Approval
- Other design pressure and seismic ratings
- Ladders | Work platform | Sunshield
- Full bladder tank stainless steel construction
- Heat tracing and/or insulation
- Bladder tank pre-installed on base frame or containerized to customer requirements
- Various colors and painting cycles with UL Listing and FM Approval (120-300 microns)
- Nondestructive examinations
- Factory acceptance test, notified body or third party inspections
- Special sea freight and fumigated packaging

Please contact KCA for further details, pricing and availability

INFORMATION *Some of the available options may not be covered by the UL listing or FM approval. Please always make reference to the appropriate approval directory or guides, or contact KCA for further assistance.*

DOC ID: TD2.3.1.1/28042026/en | Rev 26.1

6.2 General bladder tank layout and P&ID

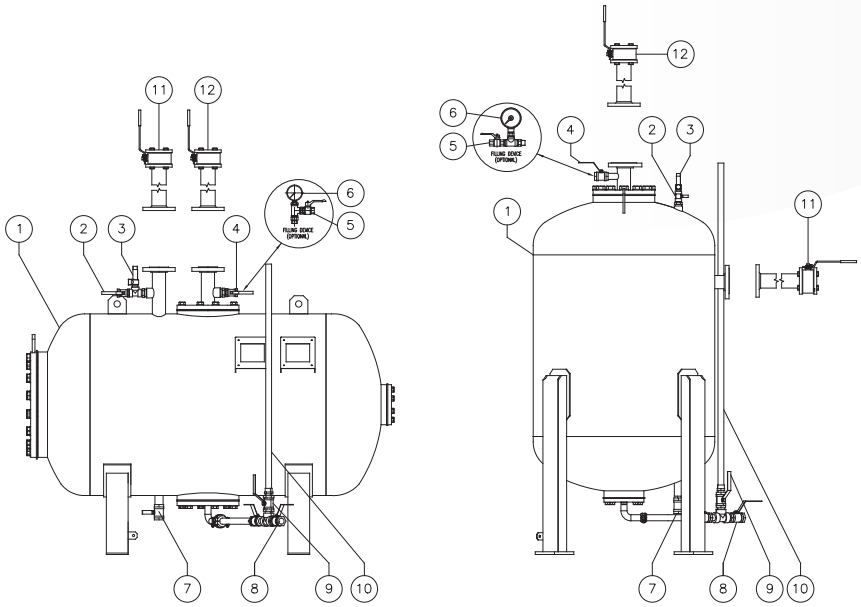

Figure 6.2.1 - Vertical and horizontal bladder tanks

Item	Description	Item	Description
1	Bladder tank	7	Water filling/drain valve (NPT)
2	Water vent valve (NPT)	8	Foam concentrate filling/drain valve (NPT)
3	Safety thermal relief valve	9	Concentrate level indicator drain valve
4	Foam concentrate vent valve (NPT)	10	Concentrate level indicator (alternative: sight tube)
5	Filling vent valve (Optional)	11	Water shut off valve (to be ordered separately)
6	Filling pressure gauge 1-10 kpa (Optional)	12	Foam concentrate shut off valve (to be ordered separately)
Note: Item 10 shown with Sight Tube. Level Gauge also available and connected at position 10.			

Table 6.2.2 - General bladder tank layout & P&ID

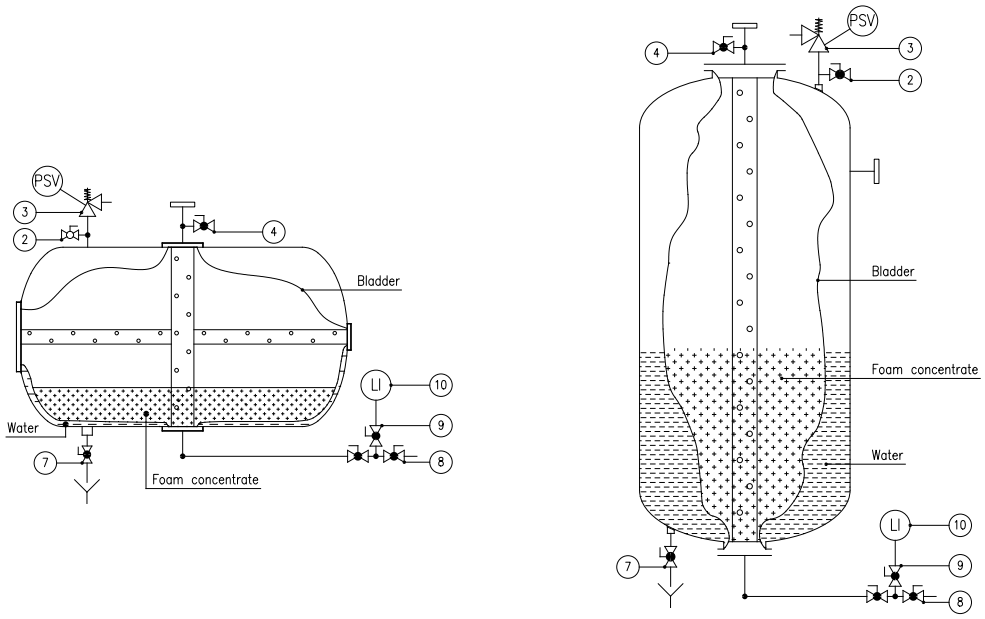

Figure 6.2.3 - P&ID

© K.C. Antincendi S.r.l. | Via Pavia 76 | 27042 Bressana Bottarone (PV) | Italy | info@kcantincendi.com

6.3 Dimensions

Figure 6.3.1 - Vertical bladder tank: 25 to 200 US gallons

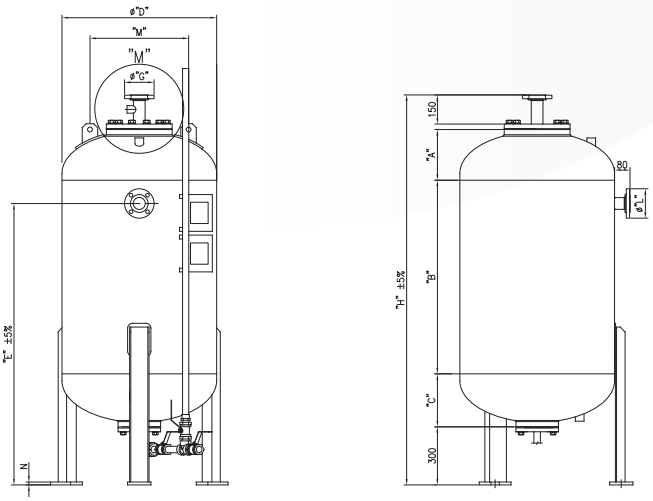

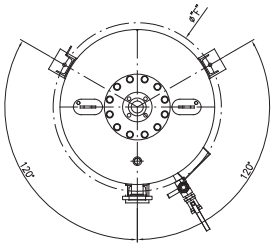

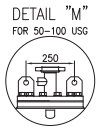

Figure 6.3.2 - Vertical bladder tank: 250 to 4,000 US gallons

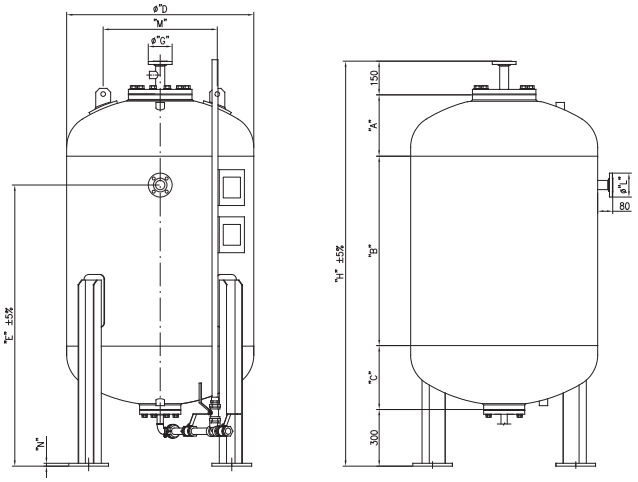

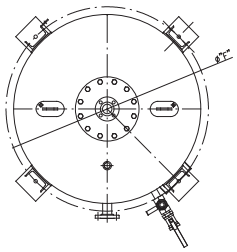

© K.C. Antincendi S.r.l. | Via Pavia 76 | 27042 Bressana Bottarone (PV) | Italy | info@kcantincendi.com

Vertical & Horizontal Bladder Tank

Foam Storage Devices | Model MXC | EN13445 & ASME Sec. VIII Div. 1

Part Number EN13445 Design Code		Capacity		Weight		A	B	C	ØD	E	ØF	ØG	H	ØL	M	N
175 psi / 12.1 bar	232 psi / 16.0 bar	USG	Litres	lbs	kg	inch	inch	inch	inch	inch	inch	inch	inch	inch	inch	inch
						mm	mm	mm	mm	mm	mm	mm	mm	mm	mm	mm
MXCV0025GF	MXCV0025GF-16	25	94	199	90	6.4	15.7	7.0	19.7	30.2	22.4	2	48.1	2	9.8	0.6
						163	400	178	500	768	570	50	1,221	50	250	15
MXCV0036GF	MXCV0036GF-16	36	136	287	130	6.4	23.6	7.0	19.7	38.1	22.4	2	55.9	2	9.8	0.6
						163	600	178	500	968	570	50	1,421	50	250	15
MXCV0050GF	MXCV0050GF-16	50	189	375	170	7.4	27.6	8.0	23.6	44.5	26.4	2	61.8	2	9.8	0.6
						187	700	203	600	1,130	670	50	1,570	50	250	15
MXCV0075GF	MXCV0075GF-16	75	283	408	185	7.4	35.4	8.0	23.6	44.5	26.4	2	69.7	2	9.8	0.6
						187	900	203	600	1,130	670	50	1,770	50	250	15
MXCV0100GF	MXCV0100GF-16	100	378	475	215	7.4	49.2	8.0	23.6	64.6	26.4	2	83.4	2	9.8	0.6
						187	1,250	203	600	1,640	670	50	2,120	50	250	15
MXCV0150GF	MXCV0150GF-16	150	567	784	355	10.3	39.4	10.8	31.5	57.1	34.3	2	79.4	2	20.1	0.6
						262	1000	274	800	1,450	870	50	2,016	50	510	15
MXCV0200GF	MXCV0200GF-16	200	757	861	390	10.3	51.2	10.8	31.5	57.1	34.3	2	91.2	2	20.1	0.6
						262	1,300	274	800	1,450	870	50	2,316	50	510	15
MXCV0250GF	MXCV0250GF-16	250	946	905	410	12.9	39.4	13.2	39.4	59.7	42.6	2.5	84.3	2.5	24.0	0.6
						327	1,000	336	1,000	1,516	1,082	65	2,142	65	610	15
MXCV0300GF	MXCV0300GF-16	300	1,135	1,033	468	12.9	51.2	13.2	39.4	71.5	42.6	2.5	96.1	2.5	24.0	0.6
						327	1,300	336	1,000	1,816	1,082	65	2,442	65	610	15
MXCV0350GF	MXCV0350GF-16	350	1,324	1,077	488	12.9	55.1	13.2	39.4	75.4	42.6	2.5	100.1	2.5	24.0	0.6
						327	1,400	336	1,000	1,916	1,082	65	2,542	65	610	15
MXCV0400GF	MXCV0400GF-16	400	1,514	1,115	505	12.9	65.0	13.2	39.4	85.3	42.6	2.5	109.9	2.5	24.0	0.6
						327	1,650	336	1,000	2,166	1,082	65	2,792	65	610	15
MXCV0450GF	MXCV0450GF-16	450	1,703	1,435	650	13.0	59.1	13.3	43.3	79.4	46.5	2.5	104.1	2.5	24.0	0.6
						329	1,500	337	1,100	2,017	1,181	65	2,645	65	610	15
MXCV0500GF	MXCV0500GF-16	500	1,892	1,578	715	13.0	70.9	13.3	43.3	91.2	46.5	2.5	115.9	2.5	24.0	0.6
						329	1,800	337	1,100	2,317	1,181	65	2,945	65	610	15
MXCV0600GF	MXCV0600GF-16	600	2,271	1,943	880	13.0	65.0	14.5	47.2	84.6	51.2	3	110.5	3	37.4	0.6
						329	1,650	368	1,200	2,148	1,300	80	2,807	80	950	15
MXCV0700GF	MXCV0700GF-16	700	2,649	2,141	970	14.1	65.0	15.5	51.2	86.4	55.3	3	113.4	3	33.5	0.6
						358	1,650	394	1,300	2,194	1,405	80	2,881	80	850	15
MXCV0800GF	MXCV0800GF-16	800	3,028	2,274	1,030	14.1	78.7	15.5	51.2	100.2	55.3	3	127.2	3	33.5	0.6
						358	2,000	394	1,300	2,544	1,405	80	3,231	80	850	15
MXCV0900GF	MXCV0900GF-16	900	3,406	2,947	1,335	15.3	78.7	16.5	55.1	100.0	59.3	3	129.4	3	36.6	0.6
						388	2,000	420	1,400	2,540	1,505	80	3,287	80	930	15
MXCV1000GF	MXCV1000GF-16	1,000	3,785	2,837	1,285	15.8	74.8	17.1	57.1	96.6	61.2	3	126.6	3	36.6	0.6
						402	1,900	434	1,450	2,454	1,555	80	3,215	80	930	15
MXCV1100GF	MXCV1100GF-16	1,100	4,163	2,991	1,355	15.8	82.7	17.1	57.1	104.5	61.2	3	134.4	3	36.6	0.6
						402	2,100	434	1,450	2,654	1,555	80	3,415	80	930	15
MXCV1200GF	MXCV1200GF-16	1,200	4,542	3,223	1,460	16.4	82.7	17.6	59.1	105.0	63.2	3	135.5	3	37.4	0.6
						416	2,100	447	1,500	2,667	1,605	80	3,442	80	950	15
MXCV1300GF	MXCV1300GF-16	1,300	4,921	3,709	1,680	17.4	78.7	18.5	63.0	102.0	67.1	3	133.6	3	41.3	0.6
						443	2,000	471	1,600	2,591	1,705	80	3,393	80	1,050	15
MXCV1400GF	MXCV1400GF-16	1,400	5,299	3,929	1,780	17.4	88.6	18.5	63.0	111.9	67.1	3	143.4	3	41.3	0.6
						443	2,250	471	1,600	2,841	1,705	80	3,643	80	1,050	15
MXCV1500GF	MXCV1500GF-16	1,500	5,678	4,437	2,010	19.6	74.8	20.6	68.9	100.1	73.2	3	133.8	3	45.3	0.6
						497	1,900	522	1,750	2,542	1,860	80	3,398	80	1,150	15
MXCV1600GF	MXCV1600GF-16	1,600	6,056	4,547	2,060	19.6	78.7	20.6	68.9	104.0	73.2	3	137.7	3	45.3	0.6
						497	2,000	522	1,750	2,642	1,860	80	3,498	80	1,150	15
MXCV1700GF	MXCV1700GF-16	1,700	6,435	4,614	2,090	20.5	78.7	21.5	70.9	103.4	75.2	3	139.6	3	45.3	0.6
						521	2,000	547	1,800	2,627	1,910	80	3,547	80	1,150	15
MXCV1800GF	MXCV1800GF-16	1,800	6813	4,669	2,115	22.6	59.1	23.5	78.7	88.5	83.5	3	121.3	3	51.2	0.8
						575	1,500	598	2,000	2,248	2,120	80	3,082	80	1,300	20
MXCV1900GF	MXCV1900GF-16	1,900	7,192	4,801	2,175	22.6	63.0	23.5	78.7	92.4	83.5	3	125.3	3	51.2	0.8
						575	1,600	598	2,000	2,348	2,120	80	3,182	80	1,300	20
MXCV2000GF	MXCV2000GF-16	2,000	7,570	4,989	2,260	22.6	68.9	23.5	78.7	98.3	83.5	3	131.2	3	51.2	0.8
						575	1,750	598	2,000	2,498	2,120	80	3,332	80	1,300	20
MXCV2200GF	MXCV2200GF-16	2,200	8,327	5,651	2,560	22.6	82.7	23.5	78.7	112.1	83.5	3	145.0	3	51.2	0.8
						575	2,100	598	2,000	2,848	2,120	80	3,682	80	1,300	20
MXCV2400GF	MXCV2400GF-16	2,400	9,084	5,850	2,650	22.6	88.6	23.5	78.7	119.2	83.5	3	150.9	3	51.2	0.8
						575	2,250	598	2,000	3,028	2,120	80	3,832	80	1,300	20
MXCV2600GF	MXCV2600GF-16	2,600	9,842	6,038	2,735	22.6	102.4	23.5	78.7	131.8	83.5	3	164.6	3	51.2	0.8
						575	2,600	598	2,000	3,348	2,120	80	4,182	80	1,300	20
MXCV2800GF	MXCV2800GF-16	2,800	10,599	6,623	3,000	22.6	114.2	23.5	78.7	143.6	83.5	3	176.5	3	51.2	0.8
						575	2,900	598	2,000	3,648	2,120	80	4482	80	1,300	20
MXCV3000GF	MXCV3000GF-16	3,000	11,356	6,876	3,115	22.6	122.0	23.5	78.7	151.5	83.5	3	184.3	3	51.2	0.8
						575	3,100	598	2,000	3,848	2,120	80	4682	80	1,300	20
MXCV3200GF	MXCV3200GF-16	3,200	12,113	7,351	3,330	22.6	133.9	23.5	78.7	163.3	83.5	3	196.1	3	51.2	0.8
						575	3,400	598	2,000	4,148	2,120	80	4982	80	1,300	20
MXCV3400GF	MXCV3400GF-16	3,400	12,870	7,726	3,500	22.6	145.7	23.5	78.7	175.1	83.5	3	208.0	3	51.2	0.8
						575	3,700	598	2,000	4,448	2,120	80	5282	80	1,300	20
MXCV3600GF	MXCV3600GF-16	3,600	13,627	7,925	3,590	22.6	151.6	23.5	78.7	181.0	83.5	3	213.9	3	51.2	0.8
						575	3,850	598	2,000	4,598	2,120	80	5432	80	1,300	20
MXCV3800GF	MXCV3800GF-16	3,800	14,384	8,366	3,790	22.6	165.4	23.5	78.7	194.8	83.5	3	227.6	3	51.2	0.8
						575	4,200	598	2,000	4,948	2,120	80	5782	80	1,300	20
MXCV4000GF	MXCV4000GF-16	4,000	15,141	8,609	3,900	22.6	173.2	23.5	78.7	202.7	83.5	3	235.5	3	51.2	0.8
						575	4,400	598	2,000	5,148	2,120	80	5982	80	1,300	20

Table 6.3.3 - Dimensions of vertical bladder tanks (EN13445 Design Code)

© K.C. Antincendi S.r.l. | Via Pavia 76 | 27042 Bressana Bottarone (PV) | Italy | info@kcantincendi.com

Vertical & Horizontal Bladder Tank

Foam Storage Devices | Model MXC | EN13445 & ASME Sec. VIII Div. 1

Bladder Tank : ASME Sec VIII Design Code		Capacity		Weight		A	B	C	ØD	E	ØF	ØG	H	ØL	M	N
175 psi / 12.1 bar	232 psi / 16.0 bar	USG	Litres	lbs	kg	inch	inch	inch	inch	inch	inch	inch	inch	inch	inch	inch
						mm	mm	mm	mm	mm	mm	mm	mm	mm	mm	mm
MXCV0025GAF	MXCV0025GAF-16	25	94	221	100	6.4	15.7	7.0	19.7	30.2	22.4	2	48.1	2	9.8	0.6
						163	400	178	500	768	570	50	1,221	50	250	15
MXCV0036GAF	MXCV0036GAF-16	36	136	309	140	6.4	23.6	7.0	19.7	38.1	22.4	2	55.9	2	9.8	0.6
						163	600	178	500	968	570	50	1,421	50	250	15
MXCV0050GAF	MXCV0050GAF-16	50	189	411	186	7.4	27.6	8.0	23.6	44.5	26.4	2	61.8	2	9.8	0.6
						187	700	203	600	1,130	670	50	1,570	50	250	15
MXCV0075GAF	MXCV0075GAF-16	75	283	450	204	7.4	35.4	8.0	23.6	44.5	26.4	2	69.7	2	9.8	0.6
						187	900	203	600	1,130	670	50	1,770	50	250	15
MXCV0100GAF	MXCV0100GAF-16	100	378	528	239	7.4	49.2	8.0	23.6	64.6	26.4	2	83.4	2	9.8	0.6
						187	1,250	203	600	1,640	670	50	2,120	50	250	15
MXCV0150GAF	MXCV0150GAF-16	150	567	850	385	10.3	39.4	10.8	31.5	57.1	34.3	2	79.4	2	20.1	0.6
						262	1,000	274	800	1,450	870	50	2,016	50	510	15
MXCV0200GAF	MXCV0200GAF-16	200	757	938	425	10.3	51.2	10.8	31.5	57.1	34.3	2	91.2	2	20.1	0.6
						262	1,300	274	800	1,450	870	50	2,316	50	510	15
MXCV0250GAF	MXCV0250GAF-16	250	946	940	426	12.9	39.4	13.2	39.4	59.7	42.6	2.5	84.3	2.5	24.0	0.6
						327	1,000	336	1,000	1,516	1,082	65	2,142	65	610	15
MXCV0300GAF	MXCV0300GAF-16	300	1,135	1,091	494	12.9	51.2	13.2	39.4	71.5	42.6	2.5	96.1	2.5	24.0	0.6
						327	1,300	336	1,000	1,816	1,082	65	2,442	65	610	15
MXCV0350GAF	MXCV0350GAF-16	350	1,324	1,113	504	12.9	55.1	13.2	39.4	75.4	42.6	2.5	100.1	2.5	24.0	0.6
						327	1,400	336	1,000	1,916	1,082	65	2,542	65	610	15
MXCV0400GAF	MXCV0400GAF-16	400	1,514	1,150	521	12.9	65.0	13.2	39.4	85.3	42.6	2.5	109.9	2.5	24.0	0.6
						327	1,650	336	1,000	2,166	1,082	65	2,792	65	610	15
MXCV0450GAF	MXCV0450GAF-16	450	1,703	1,823	826	13.0	59.1	13.3	43.3	79.4	46.5	2.5	104.1	2.5	24.0	0.6
						329	1,500	337	1,100	2,017	1,181	65	2,645	65	610	15
MXCV0500GAF	MXCV0500GAF-16	500	1,892	2,004	908	13.0	70.9	13.3	43.3	91.2	46.5	2.5	115.9	2.5	24.0	0.6
						329	1,800	337	1,100	2,317	1,181	65	2,945	65	610	15
MXCV0600GAF	MXCV0600GAF-16	600	2,271	2,267	1,027	13.0	65.0	14.5	47.2	84.6	51.2	3	110.5	3	37.4	0.6
						329	1,650	368	1,200	2,148	1,300	80	2,807	80	950	15
MXCV0700GAF	MXCV0700GAF-16	700	2,649	2,514	1,139	14.1	65.0	15.5	51.2	86.4	55.3	3	113.4	3	33.5	0.6
						358	1,650	394	1,300	2,194	1,405	80	2,881	80	850	15
MXCV0800GAF	MXCV0800GAF-16	800	3,028	2,695	1,221	14.1	78.7	15.5	51.2	100.2	55.3	3	127.2	3	33.5	0.6
						358	2,000	394	1,300	2,544	1,405	80	3,231	80	850	15
MXCV0900GAF	MXCV0900GAF-16	900	3,406	3,907	1,770	15.3	78.7	16.5	55.1	100.0	59.3	3	129.4	3	36.6	0.6
						388	2,000	420	1,400	2,540	1,505	80	3,287	80	930	15
MXCV1000GAF	MXCV1000GAF-16	1,000	3,785	3,583	1,623	15.8	74.8	17.1	57.1	96.6	61.2	3	126.6	3	36.6	0.6
						402	1,900	434	1,450	2,454	1,555	80	3,215	80	930	15
MXCV1100GAF	MXCV1100GAF-16	1,100	4,163	3,764	1,705	15.8	82.7	17.1	57.1	104.5	61.2	3	134.4	3	36.6	0.6
						402	2,100	434	1,450	2,654	1,555	80	3,415	80	930	15
MXCV1200GAF	MXCV1200GAF-16	1,200	4,542	3,817	1,729	16.4	82.7	17.6	59.1	105.0	63.2	3	135.5	3	37.4	0.6
						416	2,100	447	1,500	2,667	1,605	80	3,442	80	950	15
MXCV1300GAF	MXCV1300GAF-16	1,300	4,921	4,276	1,937	17.4	78.7	18.5	63.0	102.0	67.1	3	133.6	3	41.3	0.6
						443	2,000	471	1,600	2,591	1,705	80	3,393	80	1,050	15
MXCV1400GAF	MXCV1400GAF-16	1,400	5,299	4,358	1,974	17.4	88.6	18.5	63.0	111.9	67.1	3	143.4	3	41.3	0.6
						443	2,250	471	1,600	2,841	1,705	80	3,643	80	1,050	15
MXCV1500GAF	MXCV1500GAF-16	1,500	5,678	4,525	2,050	19.6	74.8	20.6	68.9	100.1	73.2	3	133.8	3	45.3	0.6
						497	1,900	522	1,750	2,542	1,860	80	3,398	80	1,150	15
MXCV1600GAF	MXCV1600GAF-16	1,600	6,056	4,636	2,100	19.6	78.7	20.6	68.9	104.0	73.2	3	137.7	3	45.3	0.6
						497	2,000	522	1,750	2,642	1,860	80	3,498	80	1,150	15
MXCV1700GAF	MXCV1700GAF-16	1,700	6,435	4,724	2,140	20.5	78.7	21.5	70.9	103.4	75.2	3	139.6	3	45.3	0.6
						521	2,000	547	1,800	2,627	1,910	80	3,547	80	1150	15
MXCV1800GAF	MXCV1800GAF-16	1,800	6,813	5,347	2,422	22.6	59.1	23.5	78.7	88.5	83.5	3	121.3	3	51.2	0.8
						575	1,500	598	2,000	2,248	2,120	80	3,082	80	1,300	20
MXCV1900GAF	MXCV1900GAF-16	1,900	7,192	5,501	2,492	22.6	63.0	23.5	78.7	92.4	83.5	3	125.3	3	51.2	0.8
						575	1,600	598	2,000	2,348	2,120	80	3,182	80	1,300	20
MXCV2000GAF	MXCV2000GAF-16	2,000	7,570	5,722	2,592	22.6	68.9	23.5	78.7	98.3	83.5	3	131.2	3	51.2	0.8
						575	1,750	598	2,000	2,498	2,120	80	3,332	80	1,300	20
MXCV2200GAF	MXCV2200GAF-16	2,200	8,327	6,459	2,926	22.6	82.7	23.5	78.7	112.1	83.5	3	145.0	3	51.2	0.8
						575	2,100	598	2,000	2,848	2,120	80	3,682	80	1,300	20
MXCV2400GAF	MXCV2400GAF-16	2,400	9,084	6,691	3,031	22.6	88.6	23.5	78.7	119.2	83.5	3	150.9	3	51.2	0.8
						575	2,250	598	2,000	3,028	2,120	80	3,832	80	1,300	20
MXCV2600GAF	MXCV2600GAF-16	2,600	9,842	6,954	3,150	22.6	102.4	23.5	78.7	131.8	83.5	3	164.6	3	51.2	0.8
						575	2,600	598	2,000	3,348	2,120	80	4,182	80	1,300	20
MXCV2800GAF	MXCV2800GAF-16	2,800	10,599	7,605	3,445	22.6	114.2	23.5	78.7	143.6	83.5	3	176.5	3	51.2	0.8
						575	2,900	598	2,000	3,648	2,120	80	4,482	80	1,300	20
MXCV3000GAF	MXCV3000GAF-16	3,000	11,356	7,901	3,579	22.6	122.0	23.5	78.7	151.5	83.5	3	184.3	3	51.2	0.8
						575	3,100	598	2,000	3,848	2,120	80	4,682	80	1,300	20
MXCV3200GAF	MXCV3200GAF-16	3,200	12,113	8,442	3,824	22.6	133.9	23.5	78.7	163.3	83.5	3	196.1	3	51.2	0.8
						575	3,400	598	2,000	4,148	2,120	80	4,982	80	1,300	20
MXCV3400GAF	MXCV3400GAF-16	3,400	12,870	8,881	4,023	22.6	145.7	23.5	78.7	175.1	83.5	3	208.0	3	51.2	0.8
						575	3,700	598	2,000	4,448	2,120	80	5,282	80	1,300	20
MXCV3600GAF	MXCV3600GAF-16	3,600	13,627	9,113	4,128	22.6	151.6	23.5	78.7	181.0	83.5	3	213.9	3	51.2	0.8
						575	3,850	598	2,000	4,598	2,120	80	5,432	80	1,300	20
MXCV3800GAF	MXCV3800GAF-16	3,800	14,384	9,629	4,362	22.6	165.4	23.5	78.7	194.8	83.5	3	227.6	3	51.2	0.8
						575	4,200	598	2,000	4,948	2,120	80	5,782	80	1,300	20
MXCV4000GAF	MXCV4000GAF-16	4,000	15,141	9,916	4,492	22.6	173.2	23.5	78.7	202.7	83.5	3	235.5	3	51.2	0.8
						575	4,400	598	2,000	5,148	2,120	80	5,982	80	1,300	20

Table 6.3.4 - Dimensions of vertical bladder tanks (ASME Sec VIII Design Code)

DOC ID: TD2.3.1.1/28042026/en | Rev 26.1

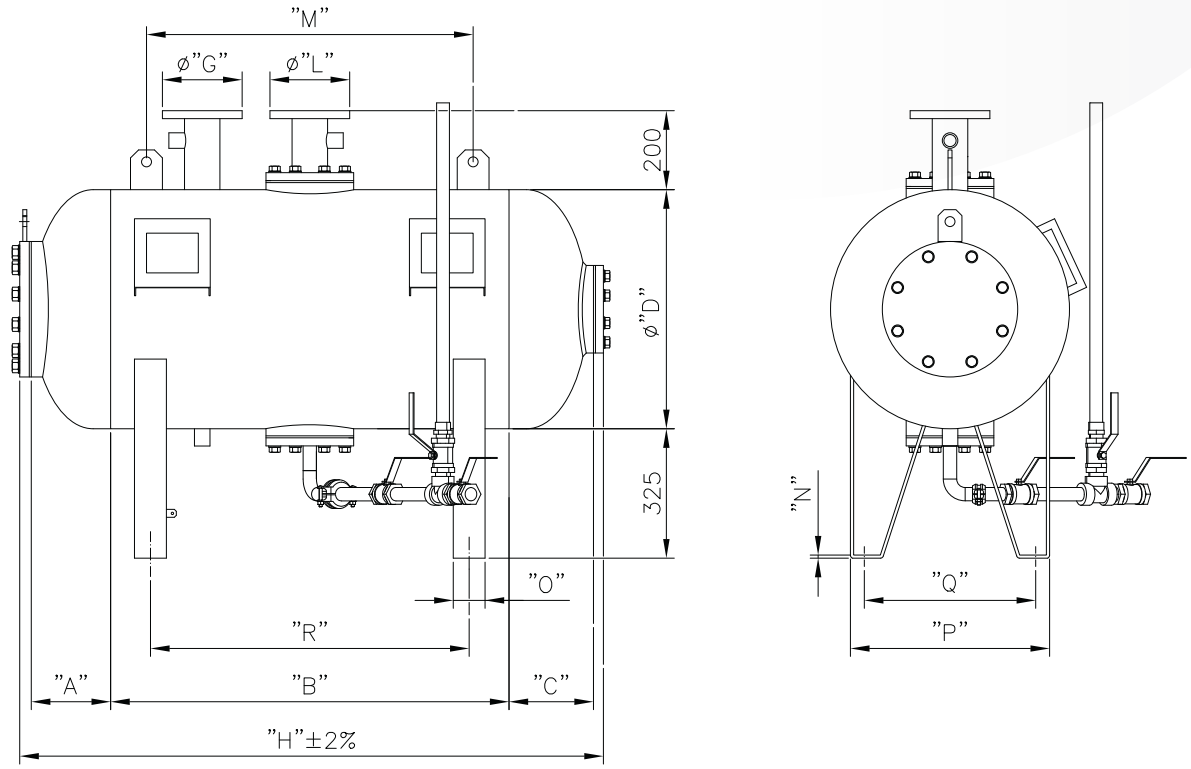

Figure 6.3.5 - Horizontal bladder tank: 50 to 100 US gallons

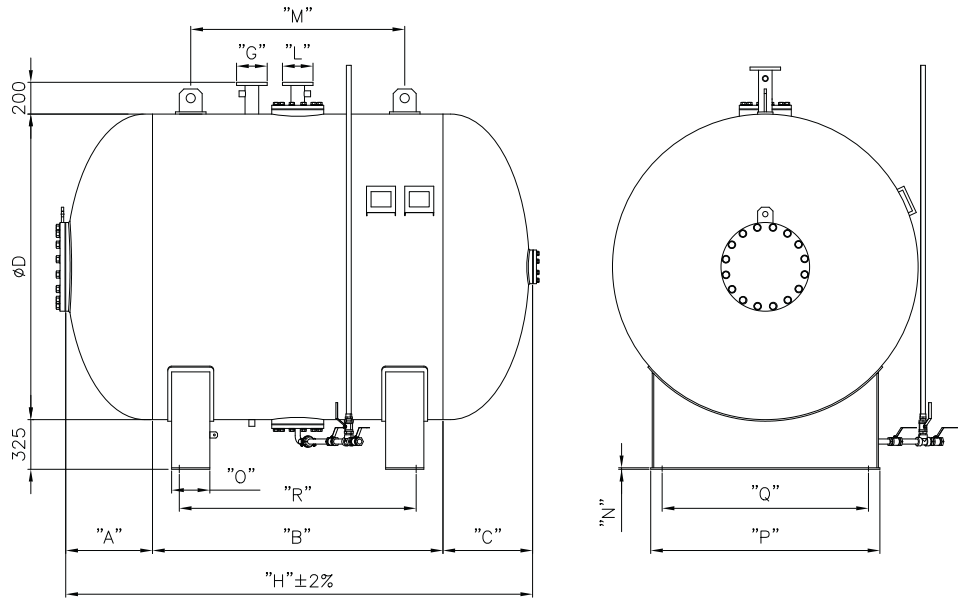

Figure 6.3.6 - Horizontal bladder tank: 150 to 5,250 US gallons

© K.C. Antincendi S.r.l. | Via Pavia 76 | 27042 Bressana Bottarone (PV) | Italy | info@kcantincendi.com

Vertical & Horizontal Bladder Tank

Foam Storage Devices | Model MXC | EN13445 & ASME Sec. VIII Div. 1

Bladder Tank Part Number EN13445 Design Code		Capacity		Weight		A	B	C	ØD	ØG	H	ØL	M	N	O	P	Q	R
175 psi / 12.1 bar	232 psi / 16.0 bar	USG	Litres	lbs	kg	inch	inch	inch	inch	inch	inch	inch	inch	inch	inch	inch	inch	inch
						mm	mm	mm	mm	mm	mm	mm	mm	mm	mm	mm	mm	mm
MXCH0050GF	MXCH0050GF-16	50	189	541	245	8.0	39.4	8.0	19.7	2	55.4	2	32.3	0.3	2.4	16.7	13.8	32.3
						203	1,000	203	500	50	1,406	50	820	8	60	425	350	820
MXCH0075GF	MXCH0075GF-16	75	283	607	275	9.0	39.4	9.0	23.6	2	57.3	2	32.3	0.3	2.4	19.7	16.9	32.3
						228	1,000	228	600	50	1,456	50	820	8	60	500	430	820
MXCH0100GF	MXCH0100GF-16	100	378	651	295	9.0	49.2	9.0	23.6	2	67.2	2	42.1	0.3	2.4	19.7	16.9	40.2
						228	1,250	228	600	50	1,706	50	1,070	8	60	500	430	1,020
MXCH0150GF	MXCH0150GF-16	150	567	784	355	10.3	39.4	10.8	31.5	2	60.5	2	51.0	0.3	4.7	19.7	15.7	32.3
						262	1,000	274	800	50	1,536	50	1,295	8	120	500	400	820
MXCH0200GF	MXCH0200GF-16	200	757	838	380	10.3	51.2	10.8	31.5	2	72.3	2	62.8	0.3	4.7	19.7	15.7	42.1
						262	1,300	274	800	50	1,836	50	1,595	8	120	500	400	1,070
MXCH0250GF	MXCH0250GF-16	250	946	1,214	550	11.3	39.4	13.2	39.4	2.5	63.9	2.5	51.0	0.3	4.7	27.6	23.6	32.3
						288	1,000	336	1,000	65	1,624	65	1,295	8	120	700	600	820
MXCH0300GF	MXCH0300GF-16	300	1,135	1,347	610	11.3	51.2	13.2	39.4	2.5	75.7	2.5	39.4	0.3	4.7	27.6	23.6	42.1
						288	1,300	336	1,000	65	1,924	65	1,295	8	120	700	600	1,070
MXCH0350GF	MXCH0350GF-16	350	1,324	1,369	620	11.3	55.1	13.2	39.4	2.5	79.7	2.5	39.4	0.3	4.7	27.6	23.6	42.1
						288	1,400	336	1,000	65	2,024	65	1,000	8	120	700	600	1,070
MXCH0400GF	MXCH0400GF-16	400	1,514	1,435	650	11.3	65.0	13.2	39.4	2.5	89.5	2.5	51.2	0.3	4.7	27.6	23.6	53.5
						288	1,650	336	1,000	65	2,274	65	1,300	8	120	700	600	1,360
MXCH0450GF	MXCH0450GF-16	450	1,703	1,854	840	11.6	59.1	13.2	43.3	2.5	83.9	2.5	45.3	0.3	4.7	31.5	27.6	48.0
						294	1,500	336	1,100	65	2,130	65	1,150	8	120	800	700	1,220
MXCH0500GF	MXCH0500GF-16	500	1,892	1,998	905	11.6	70.9	13.2	43.3	2.5	95.7	2.5	57.1	0.3	4.7	31.5	27.6	59.8
						294	1,800	336	1,100	65	2,430	65	1,450	8	120	800	700	1,520
MXCH0600GF	MXCH0600GfF-16	600	2,271	2,053	930	12.7	65.0	14.2	47.2	3	91.9	3	53.5	0.3	5.9	35.4	31.5	56.7
						322	1,650	361	1,200	80	2,333	80	1,360	8	150	900	800	1,440
MXCH0700GF	MXCH0700GF-16	700	2,649	2,274	1,030	13.8	65.0	15.2	51.2	3	94.0	3	58.3	0.3	5.9	35.4	31.5	56.7
						351	1,650	386	1,300	80	2,387	80	1,480	8	150	900	800	1,440
MXCH0800GF	MXCH0800GF-16	800	3,028	2,472	1,120	13.8	78.7	15.2	51.2	3	107.8	3	63.0	0.3	5.9	35.4	31.5	66.1
						351	2,000	386	1,300	80	2,737	80	1,600	8	150	900	800	1,680
MXCH0900GF	MXCH0900GF-16	900	3,406	3,210	1,450	15.3	78.7	16.3	55.1	3	110.3	3	63.0	0.3	5.9	39.4	33.5	66.1
						389	2,000	413	1,400	80	2,801	80	1,600	8	150	1,000	850	1,680
MXCH1000GF	MXCH1000GF-16	1,000	3,785	3,091	1,400	15.8	74.8	16.8	57.1	3	107.4	3	63.0	0.4	5.9	39.4	33.5	62.2
						402	1,900	426	1,450	80	2,728	80	1,600	10	150	1,000	850	1,580
MXCH1100GF	MXCH1100GF-16	1,100	4,163	3,245	1,470	15.8	82.7	16.8	57.1	3	115.3	3	63.0	0.4	5.9	39.4	33.5	66.1
						402	2,100	426	1,450	80	2,928	80	1,600	10	150	1,000	850	1,680
MXCH1200GF	MXCH1200GF-16	1,200	4,542	3,642	1,650	16.5	82.7	17.3	59.1	3	116.4	3	66.9	0.4	5.9	39.4	33.5	70.1
						418	2,100	439	1,500	80	2,957	80	1,700	10	150	1,000	850	1,780
MXCH1300GF	MXCH1300GF-16	1,300	4,921	3797	1,720	17.5	78.7	18.3	63.0	3	114.6	3	63.0	0.4	5.9	43.3	37.4	68.1
						445	2,000	465	1,600	80	2,910	80	1,600	10	200	1,100	950	1,730
MXCH1400GF	MXCH1400GF-16	1,400	5,299	4,029	1,825	17.5	88.6	18.3	63.0	3	124.4	3	70.9	0.4	7.9	43.3	37.4	76.0
						445	2,250	465	1,600	80	3,160	80	1,800	10	200	1,100	950	1,930
MXCH1500GF	MXCH1500GF-16	1,500	5,678	4,415	2,000	19.6	74.8	20.6	68.9	3	115.0	3	61.0	0.4	7.9	47.2	41.3	63.4
						498	1,900	522	1,750	80	2,920	80	1,550	10	200	1,200	1,050	1,610
MXCH1600GF	MXCH1600GF-16	1,600	6,056	4,636	2,100	19.6	78.7	20.6	68.9	3	118.9	3	61.0	0.4	7.9	47.2	41.3	65.4
						498	2,000	522	1,750	80	3,020	80	1,550	10	200	1,200	1,050	1,660
MXCH1700GF	MXCH1700GF-16	1,700	6,435	4,857	2,200	20.2	78.7	21.1	70.9	3	120.0	3	61.0	0.4	7.9	47.2	41.3	66.1
						513	2,000	535	1,800	80	3,047	80	1,550	10	200	1,200	1,050	1,680
MXCH1800GF	MXCH1800GF-16	1,800	6,813	5,199	2,355	22.3	59.1	23.1	78.7	3	104.4	3	47.2	0.4	5.9	59.1	53.1	49.2
						566	1,500	586	2,000	80	2,652	80	1,200	10	250	1,500	1,350	1,250
MXCH1900GF	MXCH1900GF-16	1,900	7,192	5,331	2,415	22.3	63.0	23.1	78.7	3	108.3	3	52.4	0.4	9.8	59.1	53.1	49.2
						566	1,600	586	2,000	80	2,752	80	1,330	10	250	1,500	1,350	1,250
MXCH2000GF	MXCH2000GF-16	2,000	7,570	5,503	2,505	22.3	68.9	23.1	78.7	3	114.3	3	52.4	0.4	9.8	59.1	53.1	55.1
						566	1,750	586	2,000	80	2,902	80	1,330	10	250	1,500	1,350	1,400
MXCH2200GF	MXCH2200GF-16	2,200	8,327	5,982	2,710	22.3	82.7	23.1	78.7	3	128.0	3	63.0	0.4	9.8	59.1	53.1	68.9
						566	2,100	586	2,000	80	3,252	80	1,600	10	250	1,500	1,350	1,750
MXCH2400GF	MXCH2400GF-16	2,400	9,084	6,159	2,790	22.3	88.6	23.1	78.7	3	133.9	3	68.9	0.4	9.8	59.1	53.1	74.8
						566	2,250	586	2,000	80	3,402	80	1,750	10	250	1,500	1,350	1,900
MXCH2600GF	MXCH2600GF-16	2,600	9,842	6,623	3,000	22.3	102.4	23.1	78.7	3	147.7	3	82.7	0.4	9.8	59.1	53.1	88.6
						566	2,600	586	2,000	80	3,752	80	2,100	10	250	1,500	1,350	2,250
MXCH2800GF	MXCH2800GF-16	2,800	10,599	7,064	3,200	22.3	114.2	23.1	78.7	3	159.5	3	94.5	0.4	9.8	59.1	53.1	100.4
						566	2,900	586	2,000	80	4,052	80	2,400	10	250	1,500	1,350	2,550
MXCH3000GF	MXCH3000GF-16	3,000	11,356	7,329	3,320	22.3	122.0	23.1	78.7	3	167.4	3	102.4	0.4	9.8	59.1	53.1	108.3
						566	3,100	586	2,000	80	4,252	80	2,600	10	250	1,500	1,350	2,750
MXCH3200GF	MXCH3200GF-16	3,200	12,113	7,704	3,490	22.3	133.9	23.1	78.7	3	179.2	3	114.2	0.4	9.8	59.1	53.1	120.1
						566	3,400	586	2,000	80	4,552	80	2,900	10	250	1,500	1,350	3,050
MXCH3400GF	MXCH3400GF-16	3,400	12,870	7,969	3,610	22.3	141.7	23.1	78.7	3	187.1	3	126.0	0.4	9.8	59.1	53.1	131.9
						566	3,600	586	2,000	80	4,752	80	3,200	10	250	1,500	1,350	3,350

Table 6.3.7 - Dimensions of horizontal bladder tanks (EN13445 Design Code)

© K.C. Antincendi S.r.l. | Via Pavia 76 | 27042 Bressana Bottarone (PV) | Italy | info@kcantincendi.com

Vertical & Horizontal Bladder Tank

Foam Storage Devices | Model MXC | EN13445 & ASME Sec. VIII Div. 1

Bladder Tank Part Number EN13445 Design Code		Capacity		Weight		A	B	C	ØD	ØG	H	ØL	M	N	O	P	Q	R
175 psi / 12.1 bar	232 psi / 16.0 bar	USG	Litres	lbs	kg	inch	inch	inch	inch	inch	inch	inch	inch	inch	inch	inch	inch	inch
						mm	mm	mm	mm	mm	mm	mm	mm	mm	mm	mm	mm	mm
MXCH3600GF	MXCH3600GF-16	3,600	13,627	8,300	3,760	22.3	151.6	23.1	78.7	3	196.9	3	139.8	0.4	9.8	59.1	53.1	145.7
						566	3,850	586	2,000	80	5,002	80	3,550	10	250	1,500	1,350	3,700
MXCH3800GF	MXCH3800GF-16	3,800	14,384	8,576	3,885	22.3	159.4	23.1	78.7	3	204.8	3	139.8	0.4	9.8	59.1	53.1	145.7
						566	4,050	586	2,000	80	5,202	80	3,550	10	250	1,500	1,350	3,700
MXCH4000GF	MXCH4000GF-16	4,000	15,141	9,040	4,095	22.3	173.2	23.1	78.7	3	218.6	3	139.8	0.4	9.8	59.1	53.1	145.7
						566	4,400	586	2,000	80	5,552	80	3,550	10	250	1,500	1,350	3,700
MXCH4250GF	MXCH4250GF-16	4,250	16,088	9,437	4,275	22.3	185.0	23.1	78.7	3	230.4	3	139.8	0.4	9.8	59.1	53.1	145.7
						566	4,700	586	2,000	80	5,852	80	3,550	10	250	1,500	1,350	3,700
MXCH4500GF	MXCH4500GF-16	4,500	17,034	9,834	4,455	22.3	196.9	23.1	78.7	3	242.2	3	139.8	0.4	9.8	59.1	53.1	151.6
						566	5,000	586	2,000	80	6,152	80	3,550	10	250	1,500	1,350	3,850
MXCH4750GF	MXCH4750GF-16	4,750	17,980	10,298	4,665	22.3	210.6	23.1	78.7	3	256.0	3	139.8	0.4	9.8	59.1	53.1	151.6
						566	5,350	586	2,000	80	6,502	80	3,550	10	250	1,500	1,350	3,850
MXCH5000GF	MXCH5000GF-16	5,000	18,927	10,695	4,845	22.3	222.4	23.1	78.7	3	267.8	3	139.8	0.4	9.8	59.1	53.1	159.4
						566	5,650	586	2,000	80	6,802	80	3,550	10	250	1,500	1,350	4,050
MXCH5250GF	MXCH5250GF-16	5,250	19,873	11,159	5,055	22.3	236.2	23.1	78.7	3	281.6	3	139.8	0.4	9.8	59.1	53.1	159.4
						566	6,000	586	2,000	80	7,152	80	3,550	10	250	1,500	1,350	4,050

Table 6.3.7 - Dimensions of horizontal bladder tanks (EN13445 Design Code) (continued)

Bladder Tank : ASME Sec VIII Design Code		Capacity		Weight		A	B	C	ØD	ØG	H	ØL	M	N	O	P	Q	R
175 psi / 12.1 bar	232 psi / 16.0 bar	USG	Litres	lbs	kg	inch	inch	inch	inch	inch	inch	inch	inch	inch	inch	inch	inch	inch
						mm	mm	mm	mm	mm	mm	mm	mm	mm	mm	mm	mm	mm
MXCH0050GAF	MXCH0050GAF-16	50	189	574	260	8.0	39.4	8.0	19.7	2	55.4	2	32.3	0.3	7.9	16.7	13.8	32.3
						203	1,000	203	500	50	1,406	50	820	8	200	425	350	820
MXCH0075GAF	MXCH0075GAF-16	75	283	640	290	9.0	39.4	9.0	23.6	2	57.3	2	32.3	0.3	7.9	19.7	16.9	32.3
						228	1,000	228	600	50	1,456	50	820	8	200	500	430	820
MXCH0100GAF	MXCH0100GAF-16	100	378	684	310	9.0	49.2	9.0	23.6	2	67.2	2	42.1	0.3	7.9	19.7	16.9	40.2
						228	1,250	228	600	50	1,706	50	1,070	8	200	500	430	1,020
MXCH0150GAF	MXCH0150GAF-16	150	567	828	375	10.3	39.4	10.8	31.5	2	60.5	2	51.0	0.3	7.9	19.7	15.7	32.3
						262	1,000	274	800	50	1,536	50	1,295	8	200	500	400	820
MXCH0200GAF	MXCH0200GAF-16	200	757	883	400	10.3	51.2	10.8	31.5	2	72.3	2	62.8	0.3	7.9	19.7	15.7	42.1
						262	1,300	274	800	50	1,836	50	1,595	8	200	500	400	1,070
MXCH0250GAF	MXCH0250GAF-16	250	946	1,258	570	11.3	39.4	13.2	39.4	2.5	63.9	2.5	51.0	0.3	7.9	27.6	23.6	32.3
						288	1,000	336	1,000	65	1,624	65	1,295	8	200	700	600	820
MXCH0300GAF	MXCH0300GAF-16	300	1,135	1,391	630	11.3	51.2	13.2	39.4	2.5	75.7	2.5	39.4	0.3	7.9	27.6	23.6	42.1
						288	1,300	336	1,000	65	1,924	65	1,295	8	200	700	600	1,070
MXCH0350GAF	MXCH0350GAF-16	350	1,324	1,435	650	11.3	55.1	13.2	39.4	2.5	79.7	2.5	39.4	0.3	7.9	27.6	23.6	42.1
						288	1,400	336	1,000	65	2,024	65	1,000	8	200	700	600	1,070
MXCH0400GAF	MXCH0400GAF-16	400	1,514	1,479	670	11.3	65.0	13.2	39.4	2.5	89.5	2.5	51.2	0.3	5.9	27.6	23.6	53.5
						288	1,650	336	1,000	65	2,274	65	1,300	8	150	700	600	1,360
MXCH0450GAF	MXCH0450GAF-16	450	1,703	2,137	968	11.6	59.1	13.2	43.3	2.5	83.9	2.5	45.3	0.3	5.9	31.5	27.6	48.0
						294	1,500	336	1,100	65	2,130	65	1,150	8	150	800	700	1,220
MXCH0500GAF	MXCH0500GAF-16	500	1,892	2,318	1,050	11.6	70.9	13.2	43.3	2.5	95.7	2.5	57.1	0.3	5.9	31.5	27.6	59.8
						294	1,800	336	1,100	65	2,430	65	1,450	8	150	800	700	1,520
MXCH0600GAF	MXCH0600GAFF-16	600	2,271	2,377	1,077	12.7	65.0	14.2	47.2	3	91.9	3	53.5	0.3	5.9	35.4	31.5	56.7
						322	1,650	361	1,200	80	2,333	80	1,360	8	150	900	800	1,440
MXCH0700GAF	MXCH0700GAF-16	700	2,649	2,651	1,201	13.8	65.0	15.2	51.2	3	94.0	3	58.3	0.3	5.9	35.4	31.5	56.7
						351	1,650	386	1,300	80	2,387	80	1,480	8	150	900	800	1,440
MXCH0800GAF	MXCH0800GAF-16	800	3,028	2,898	1,313	13.8	78.7	15.2	51.2	3	107.8	3	63.0	0.3	5.9	35.4	31.5	66.1
						351	2,000	386	1,300	80	2,737	80	1,600	8	150	900	800	1,680
MXCH0900GAF	MXCH0900GAF-16	900	3,406	3,680	1,667	15.3	78.7	16.3	55.1	3	110.3	3	63.0	0.3	5.9	39.4	33.5	66.1
						389	2,000	413	1,400	80	2,801	80	1,600	8	150	1000	850	1,680
MXCH1000GAF	MXCH1000GAF-16	1,000	3,785	3,592	1,627	15.8	74.8	16.8	57.1	3	107.4	3	63.0	0.4	5.9	39.4	33.5	62.2
						402	1,900	426	1,450	80	2,728	80	1,600	10	150	1,000	850	1,580
MXCH1100GAF	MXCH1100GAF-16	1,100	4,163	3,777	1,711	15.8	82.7	16.8	57.1	3	115.3	3	63.0	0.4	5.9	39.4	33.5	66.1
						402	2,100	426	1,450	80	2,928	80	1,600	10	150	1,000	850	1,680
MXCH1200GAF	MXCH1200GAF-16	1,200	4,542	4,159	1,884	16.5	82.7	17.3	59.1	3	116.4	3	66.9	0.4	5.9	39.4	33.5	70.1
						418	2,100	439	1,500	80	2,957	80	1,700	10	150	1,000	850	1,780
MXCH1300GAF	MXCH1300GAF-16	1,300	4,921	4,355	1,973	17.5	78.7	18.3	63.0	3	114.6	3	63.0	0.4	5.9	43.3	37.4	68.1
						445	2,000	465	1,600	80	2,910	80	1,600	10	150	1,100	950	1,730
MXCH1400GAF	MXCH1400GAF-16	1,400	5,299	4,629	2,097	17.5	88.6	18.3	63.0	3	124.4	3	70.9	0.4	5.9	43.3	37.4	76.0
						445	2,250	465	1,600	80	3,160	80	1,800	10	150	1,100	950	1,930
MXCH1500GAF	MXCH1500GAF-16	1,500	5,678	4,525	2,050	19.6	74.8	20.6	68.9	3	115.0	3	61.0	0.4	5.9	47.2	41.3	63.4
						498	1,900	522	1,750	80	2,920	80	1,550	10	150	1,200	1,050	1,610

Table 6.3.8 - Dimensions of horizontal bladder tanks (ASME Sec VIII Design Code)

DOC ID: TD2.3.1.1/28042026/en | Rev 26.1

Bladder Tank : ASME Sec VIII Design Code		Capacity		Weight		A	B	C	ØD	ØG	H	ØL	M	N	O	P	Q	R
175 psi / 12.1 bar	232 psi / 16.0 bar	USG	Litres	lbs	kg	inch	inch	inch	inch	inch	inch	inch	inch	inch	inch	inch	inch	inch
						mm	mm	mm	mm	mm	mm	mm	mm	mm	mm	mm	mm	mm
MXCH1600GAF	MXCH1600GAF-16	1,600	6,056	4,646	2,150	19.6	78.7	20.6	68.9	3	118.9	3	61.0	0.4	5.9	47.2	41.3	65.4
						498	2,000	522	1,750	80	3,020	80	1,550	10	150	1,200	1,050	1,660
MXCH1700GAF	MXCH1700GAF-16	1,700	6,435	4,967	2,250	20.2	78.7	21.1	70.9	3	120.0	3	61.0	0.4	5.9	47.2	41.3	66.1
						513	2,000	535	1,800	80	3,047	80	1,550	10	150	1,200	1,050	1,680
MXCH1800GAF	MXCH1800GAF-16	1,800	6,813	5,700	2,582	22.3	59.1	23.1	78.7	3	104.4	3	47.2	0.4	5.9	59.1	53.1	49.2
						566	1,500	586	2,000	80	2,652	80	1,200	10	150	1,500	1,350	1,250
MXCH1900GAF	MXCH1900GAF-16	1,900	7,192	5,854	2,652	22.3	63.0	23.1	78.7	3	108.3	3	52.4	0.4	5.9	59.1	53.1	49.2
						566	1,600	586	2,000	80	2,752	80	1,330	10	150	1,500	1,350	1,250
MXCH2000GAF	MXCH2000GAF-16	2,000	7,570	6,086	2,757	22.3	68.9	23.1	78.7	3	114.3	3	52.4	0.4	5.9	59.1	53.1	55.1
						566	1,750	586	2,000	80	2,902	80	1,330	10	150	1,500	1,350	1,400
MXCH2200GAF	MXCH2200GAF-16	2,200	8,327	6,581	2,981	22.3	82.7	23.1	78.7	3	128.0	3	63.0	0.4	5.9	59.1	53.1	68.9
						566	2,100	586	2,000	80	3,252	80	1,600	10	150	1,500	1,350	1,750
MXCH2400GAF	MXCH2400GAF-16	2,400	9,084	6,823	3,091	22.3	88.6	23.1	78.7	3	133.9	3	68.9	0.4	5.9	59.1	53.1	74.8
						566	2,250	586	2,000	80	3,402	80	1,750	10	150	1,500	1,350	1,900
MXCH2600GAF	MXCH2600GAF-16	2,600	9,842	7,362	3,335	22.3	102.4	23.1	78.7	3	147.7	3	82.7	0.4	5.9	59.1	53.1	88.6
						566	2,600	586	2,000	80	3,752	80	2,100	10	150	1,500	1,350	2,250
MXCH2800GAF	MXCH2800GAF-16	2,800	10,599	7,870	3,565	22.3	114.2	23.1	78.7	3	159.5	3	94.5	0.4	5.9	59.1	53.1	100.4
						566	2,900	586	2,000	80	4,052	80	2,400	10	150	1,500	1,350	2,550
MXCH3000GAF	MXCH3000GAF-16	3,000	11,356	8,177	3,704	22.3	122.0	23.1	78.7	3	167.4	3	102.4	0.4	5.9	59.1	53.1	108.3
						566	3,100	586	2,000	80	4,252	80	2,600	10	150	1,500	1,350	2,750
MXCH3200GAF	MXCH3200GAF-16	3,200	12,113	8,618	3,904	22.3	133.9	23.1	78.7	3	179.2	3	114.2	0.4	5.9	59.1	53.1	120.1
						566	3,400	586	2,000	80	4,552	80	2,900	10	150	1,500	1,350	3,050
MXCH3400GAF	MXCH3400GAF-16	3,400	12,870	8,925	4,043	22.3	141.7	23.1	78.7	3	187.1	3	126.0	0.4	5.9	59.1	53.1	131.9
						566	3,600	586	2,000	80	4,752	80	3,200	10-	150	1,500	1,350	3,350
MXCH3600GAF	MXCH3600GAF-16	3,600	13,627	9,311	4,218	22.3	151.6	23.1	78.7	3	196.9	3	139.8	0.4	5.9	59.1	53.1	145.7
						566	3,850	586	2,000	80	5,002	80	3,550	10	150	1,500	1,350	3,700
MXCH3800GAF	MXCH3800GAF-16	3,800	14,384	9,631	4,363	22.3	159.4	23.1	78.7	3	204.8	3	139.8	0.4	5.9	59.1	53.1	145.7
						566	4,050	586	2,000	80	5,202	80	3,550	10	150	1,500	1,350	3,700
MXCH4000GAF	MXCH4000GAF-16	4,000	15,141	10,170	4,607	22.3	173.2	23.1	78.7	3	218.6	3	139.8	0.4	5.9	59.1	53.1	145.7
						566	4,400	586	2,000	80	5,552	80	3,550	10	150	1,500	1,350	3,700
MXCH4250GAF	MXCH4250GAF-16	4,250	16,088	10,631	4,816	22.3	185.0	23.1	78.7	3	230.4	3	139.8	0.4	5.9	59.1	53.1	145.7
						566	4,700	586	2,000	80	5,852	80	3,550	10	150	1,500	1,350	3,700
MXCH4500GAF	MXCH4500GAF-16	4,500	17,034	11,095	5,026	22.3	196.9	23.1	78.7	3	242.2	3	139.8	0.4	5.9	59.1	53.1	151.6
						566	5,000	586	2,000	80	6,152	80	3,550	10	150	1,500	1,350	3,850
MXCH4750GAF	MXCH4750GAF-16	4,750	17,980	11,634	5,270	22.3	210.6	23.1	78.7	3	256.0	3	139.8	0.4	5.9	59.1	53.1	151.6
						566	5,350	586	2,000	80	6,502	80	3,550	10	150	1,500	1,350	3,850
MXCH5000GAF	MXCH5000GAF-16	5,000	18,927	12,097	5,480	22.3	222.4	23.1	78.7	3	267.8	3	139.8	0.4	5.9	59.1	53.1	159.4
						566	5,650	586	2,000	80	6,802	80	3,550	10	150	1,500	1,350	4,050
MXCH5250GAF	MXCH5250GAF-16	5,250	19,873	12,636	5,724	22.3	236.2	23.1	78.7	3	281.6	3	139.8	0.4	5.9	59.1	53.1	159.4
						566	6,000	586	2,000	80	7,152	80	3,550	10	150	1,500	1,350	4,050

Table 6.3.8 - Dimensions of horizontal bladder tanks (ASME Sec VIII Design Code) (continued)

7 Installation

Refer to appropriate installation standards (i.e. NFPA, VdS, LPCB, etc.) and / or applicable FM Global Property Loss Prevention Data Sheets such as 4-12, Foam-Water Sprinkler Systems.
The KCA installation, operation and maintenance bladder tank manual shall also be referenced.

NOTICE

When designing a bladder tank into your fire protection system, please give consideration to future maintenance activities. Ensure that adequate clearance above a vertical bladder tank or at the inspection flange end of a horizontal tank is allowed. For further guidance contact KCA.

DOC ID: TD2.3.1.1/28042026/en | Rev 26.1

8 Operation

1. Foam concentrate is stored inside the bladder. When used in conjunction with a ratio controller it proportions foam concentrate accurately into the water stream.
2. During system activation, the outer side of the bladder is pressurized by the system water supply which forces foam concentrate to the ratio controller.
3. Simultaneously, as water flows through the venturi area of the ratio controller, a metered pressure drop draws foam concentrate into the system water stream creating a foam solution mixed to the appropriate ratios.
4. The foam solution flows through the system pipework and out of any open sprinklers, nozzles or other discharge devices.
5. As the foam concentrate continues to flow from the inside of the bladder, system water enters the bladder tank on the outside of the bladder keeping a balanced pressure system.

9 Guarantee

For details of warranty, refer to KCA's current list price schedule or contact KCA directly.

10 Inspections, tests and maintenance

WARNING

Any system maintenance or testing that involves placing a control valve or detection system out of service may eliminate the fire protection capabilities of that system. Prior to proceeding, notify all Authorities Having Jurisdiction. Consideration should be given to employment of a fire patrol in the affected area.

Refer to respective requirements, according to the relevant standards for Inspection, Testing and Maintenance.
If applicable, refer to FM Global Property Loss Prevention Datasheet 4-12 for specific test and commissioning criteria.
In addition, the "Authority Having Jurisdiction" (AHJ) may have additional maintenance, testing and inspection requirements that must be followed.

11 Disposal



At end of use the product described here should be disposed of via the national recycling system.
Upon request the manufacturer can take back and properly dispose of the electrical equipment and electronic devices.

12 Accessories and spares

Description	Material	Connection	Part number	
			12 bar tanks	16 bar tanks
Standard Safety Valve	Brass	1/2"	B10C12.1	B10C16
Hydrometer Level Gauge	Stainless steel 316	1/2"	HYDROMETER	
Filling Device with KPA	Carbon steel	1"	FILLDEVICE	
Replacement Bladder	Hypalon-neoprene or NBR	Contact us with tank serial number		
Sight tube replacement kit	Various	Contact us with tank serial number		

Table 12.1.1 - Optional / Standard spare parts

Language	Part number
English	TM2.3.1.1_en
German	TM2.3.1.1_de
Italian	TM2.3.1.1_it

Table 12.1.2 - Bladder tank manual

13 Declaration of conformity

If required. Contact KCA for further information.

DOC ID: TD2.3.1.1/28042026/en | Rev 26.1